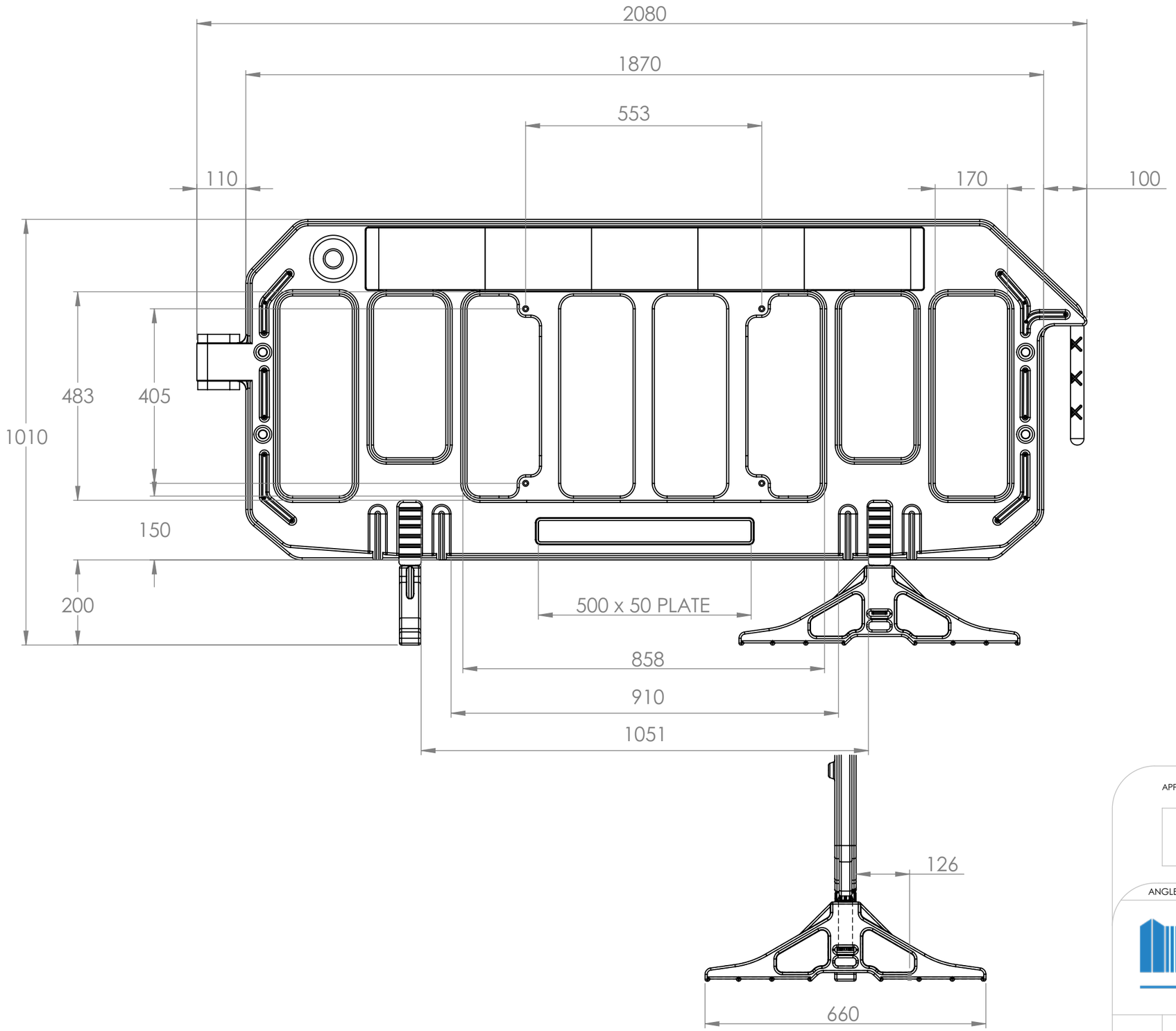

DETAIL A

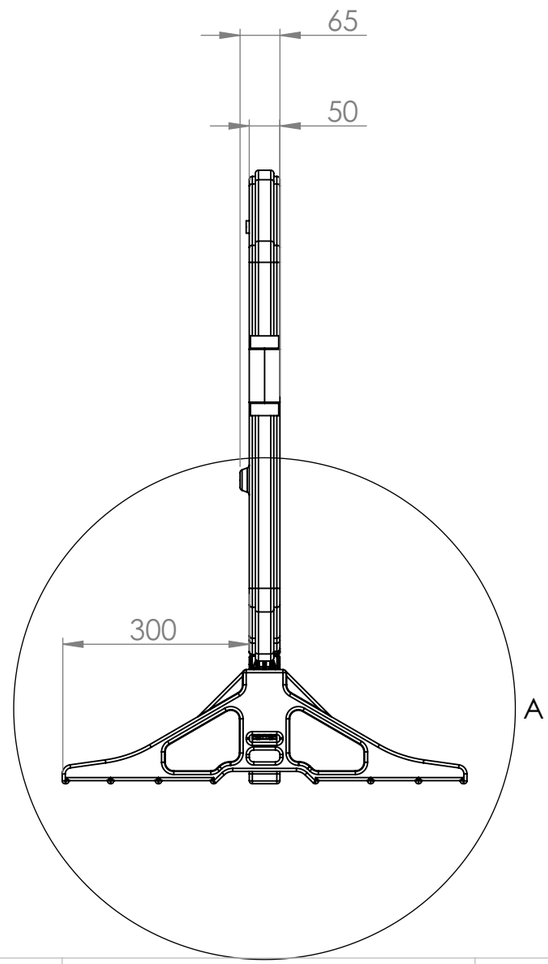

APPROVAL:

SIGNED:

DATE:

ANGLE OF PROJECTION:Third Angle

THIS IS A COMPUTER GENERATEDDRAWING-REJECT IFMODIFIEDBY HAND

FirstFence® HIRE & SALES

TITLE:

Gate Barrier

	NAME	DATE
DRAWN	D. Wolstenholme	09 November 2026

WEIGHT: 10.30 KG

DEBUR AND BREAK ALL SHARP EDGES UNLESS OTHERWISE STATED

PROJECT/DWG NO: 104

REVISION: 03

SHEET: A3

SHEET 1 OF 1

THIS DRAWING IS THE PROPERTY & COPYRIGHT OF MELBA SWINTEX AND MUST NOT BE COPIED OR COMMUNICATED WITHOUT WRITTEN PERMISSION.

UNIT OF MEASUREMENT: mm

SCALE:1:10