

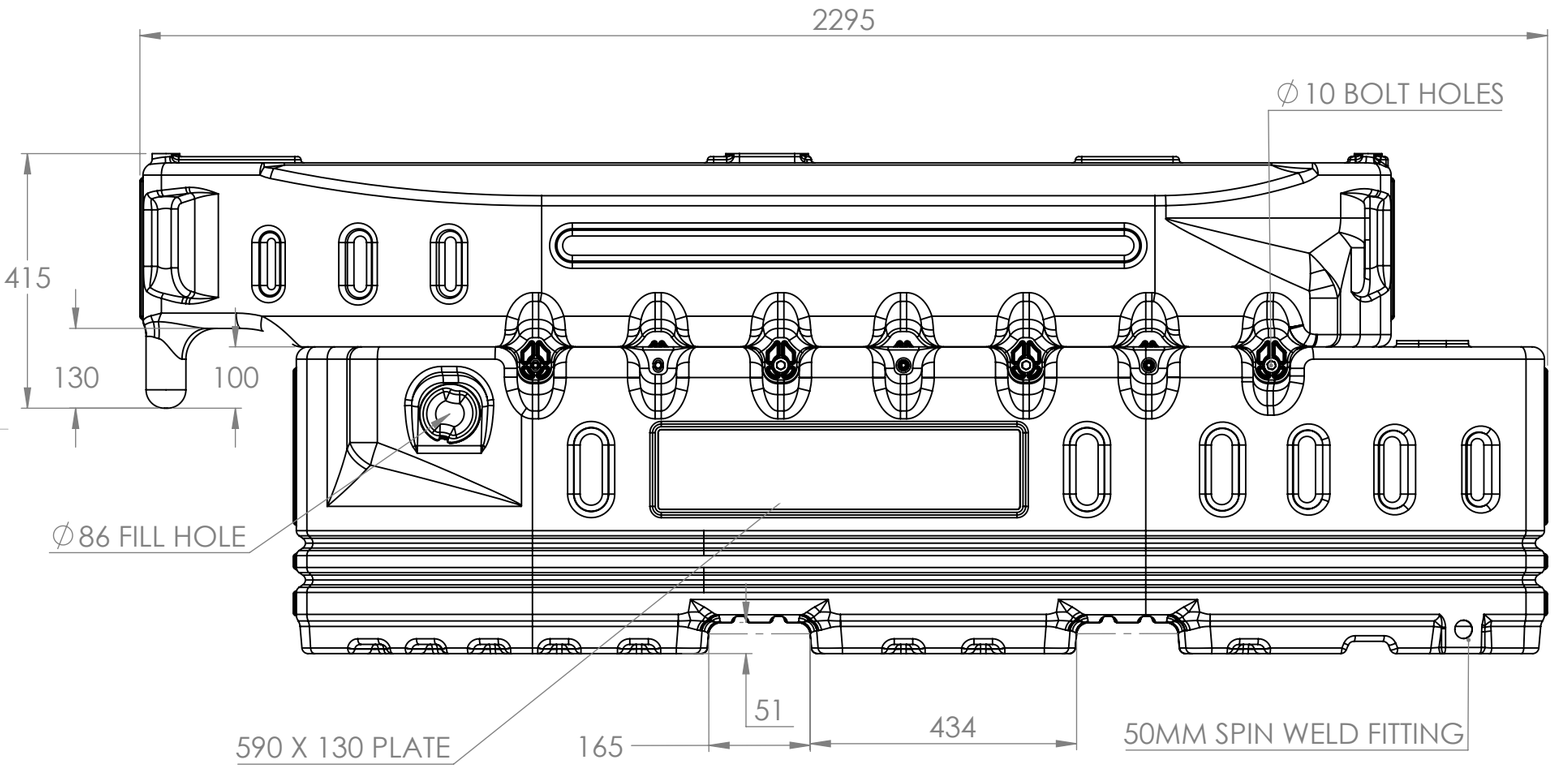

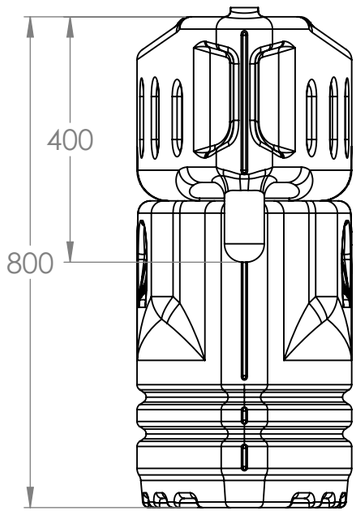

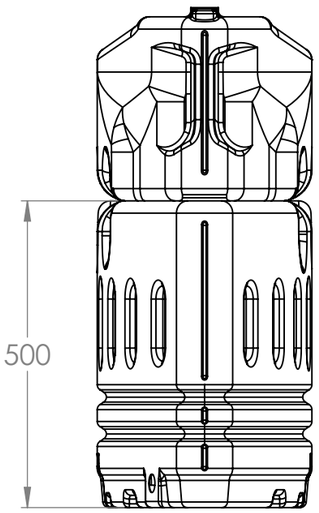

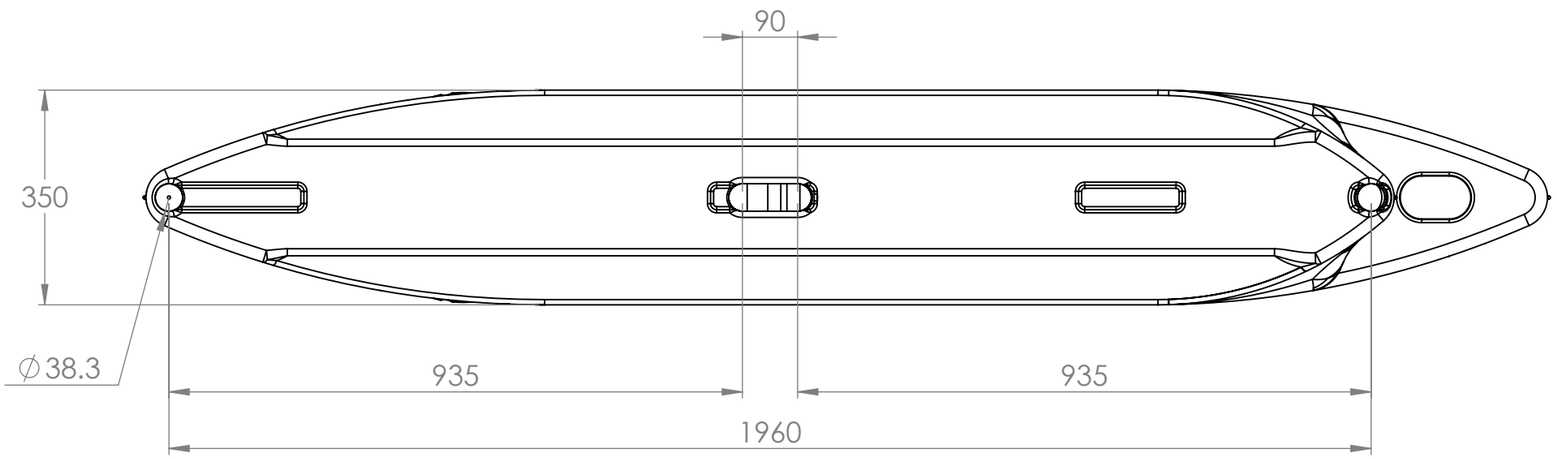

ANGLE OF PROJECTION: Third Angle

THIS IS A COMPUTER GENERATED DRAWING - REJECT IF MODIFIED BY HAND

FirstFence
HIRE & SALES
sales@firstfence.co.uk
01283 512111
www.firstfence.co.uk

TITLE:

0.8m CityWall

	NAME	DATE
DRAWN	D. Wolstenholme	11 September 2023

THIS DRAWING IS THE PROPERTY & COPYRIGHT OF MELBA SWINTEX AND MUST NOT BE COPIED OR COMMUNICATED WITHOUT WRITTEN PERMISSION.

WEIGHT: est. 18.5 kg

CAPACITY: est. 250 litres

DEBUR AND BREAK ALL SHARP EDGES UNLESS OTHERWISE STATED

PROJECT/DWG NO: 297

REVISION 26

SHEET A3

UNIT OF MEASUREMENT: mm

SCALE:1:10

SHEET 1 OF 1