FirstFence®
HIRE & SALES

HOG600 Barriers

Specification Sheet

SPC-HOG600-001A



Call our Expert Sales Team for more information.

First Fence Ltd | Kiln Way, Woodville, South Derbyshire, DE11 8EA
01283 512 111 | www.firstfence.co.uk | sales@firstfence.co.uk

FirstFence®
HIRE & SALES

HOG600 Barriers

Specification Sheet

SPC-HOG600-001A

Versatile Perimeter Security & Anti-Trip Safety

Engineered for stability and longevity, the HOG600 Water Separator delivers anti-trip protection for dynamic traffic management and site enclosures. Providing a secure working environment, this system is manufactured from 100% recyclable HDPE and utilises over 55 litres of water ballast to easily withstand challenging conditions and prolonged outdoor use.

Designed for rapid deployment and efficient logistics, the HOG600 features an intuitive hook and eye connection for quick installation and secure assembly. With integrated fork-lift entry, top-emptying capability, and stable stacking, it ensures streamlined handling. Providing over 235° of angular freedom, compatibility with other water-filled systems, and the ability to increase height to 1.6 metres using the multi-use DoubleTop, it offers ultimate flexibility—complete with optional corporate embossing—to meet your site's dynamic temporary safety requirements.

Key Features

- Anti-Trip Security
  (Designed to be completely anti-trip for a safer working environment)
- High Ballast Capacity
  (Holds over 55 litres of water to provide maximum stability)
- Rapid Asssembly
  (An intuitive hook and eye connection for quick and secure deployment)
- Maximum Adaptability
  (Delivers 235° of angular freedom)
- Streamlined Handling
  (Designed with integrated fork-lift entry, stable stacking, and top emptying)

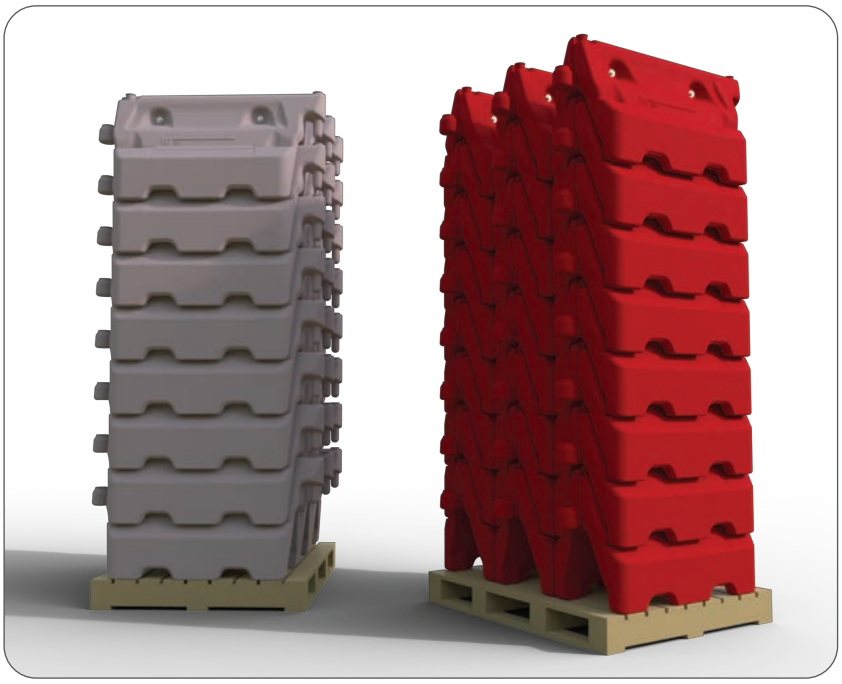

Suitable For

- Traffic Management & Roadworks
- Construction Site Enclosures
- Event Crowd Control
- Pedestrian Segregation
- Emergency Hazard Cordoning

Specification

HEIGHT	WIDTH	DEPTH	WEIGHT	MATERIAL	COLOUR
560mm	1130mm	400mm	5.5kg (Empty) 60kg (Filled)	High Density Polyethylene	Red or White







Call our Expert Sales Team for more information.

First Fence Ltd | Kiln Way, Woodville, South Derbyshire, DE11 8EA
01283 512 111 | www.firstfence.co.uk | sales@firstfence.co.uk

HOG600 Barriers

Specification Sheet

SPC-HOG600-001A

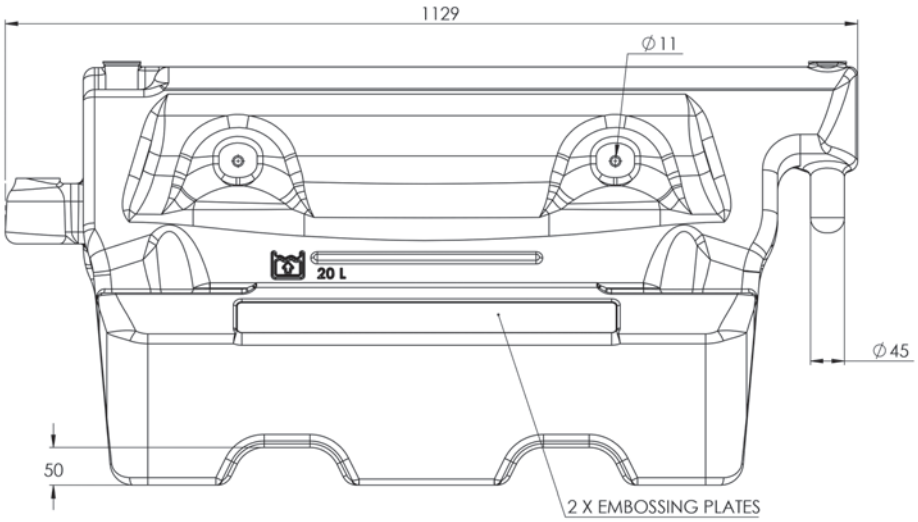

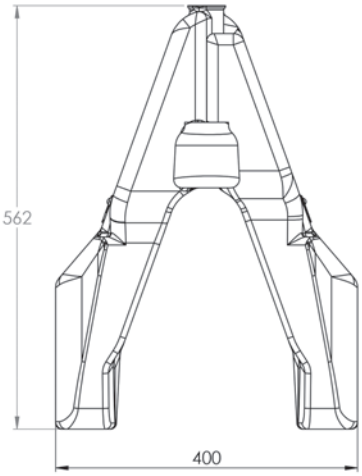

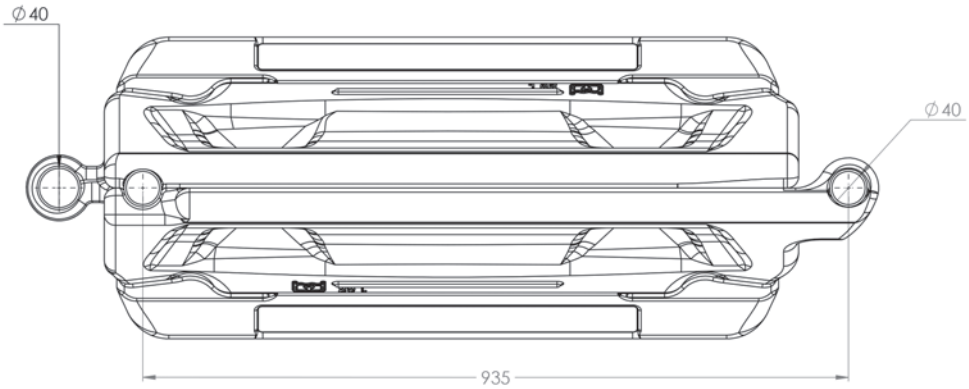

Wind Speed Testing

Temporary traffic barriers require ballast to comply with the three wind speed classifications outlined in BS 8442:2015:

Class A: 26.3 m/s (58 mph)

Class B: 17.6 m/s (39 mph)

Class C: 8.7 m/s (19 mph)

To determine its maximum wind resistance, the water-filled HOG600 Barrier underwent rigorous testing at the MIRA Full-Scale Wind Tunnel. The resulting wind speed tolerances and recommended ballast weights for each Wind Class are detailed below:

CLASS C

Withstood over 60 mph
Recommended Ballast Weight: 0kg



Passed

CLASS B

Withstood over 60 mph
Recommended Ballast Weight: 0kg



Passed

CLASS A

Withstood over 60 mph
Recommended Ballast Weight: 0kg



Passed

CIRCLE

Withstood over 60 mph
Recommended Ballast Weight: 0kg



Passed

Call our Expert Sales Team for more information.

First Fence Ltd | Kiln Way, Woodville, South Derbyshire, DE11 8EA

01283 512 111 | www.firstfence.co.uk | sales@firstfence.co.uk