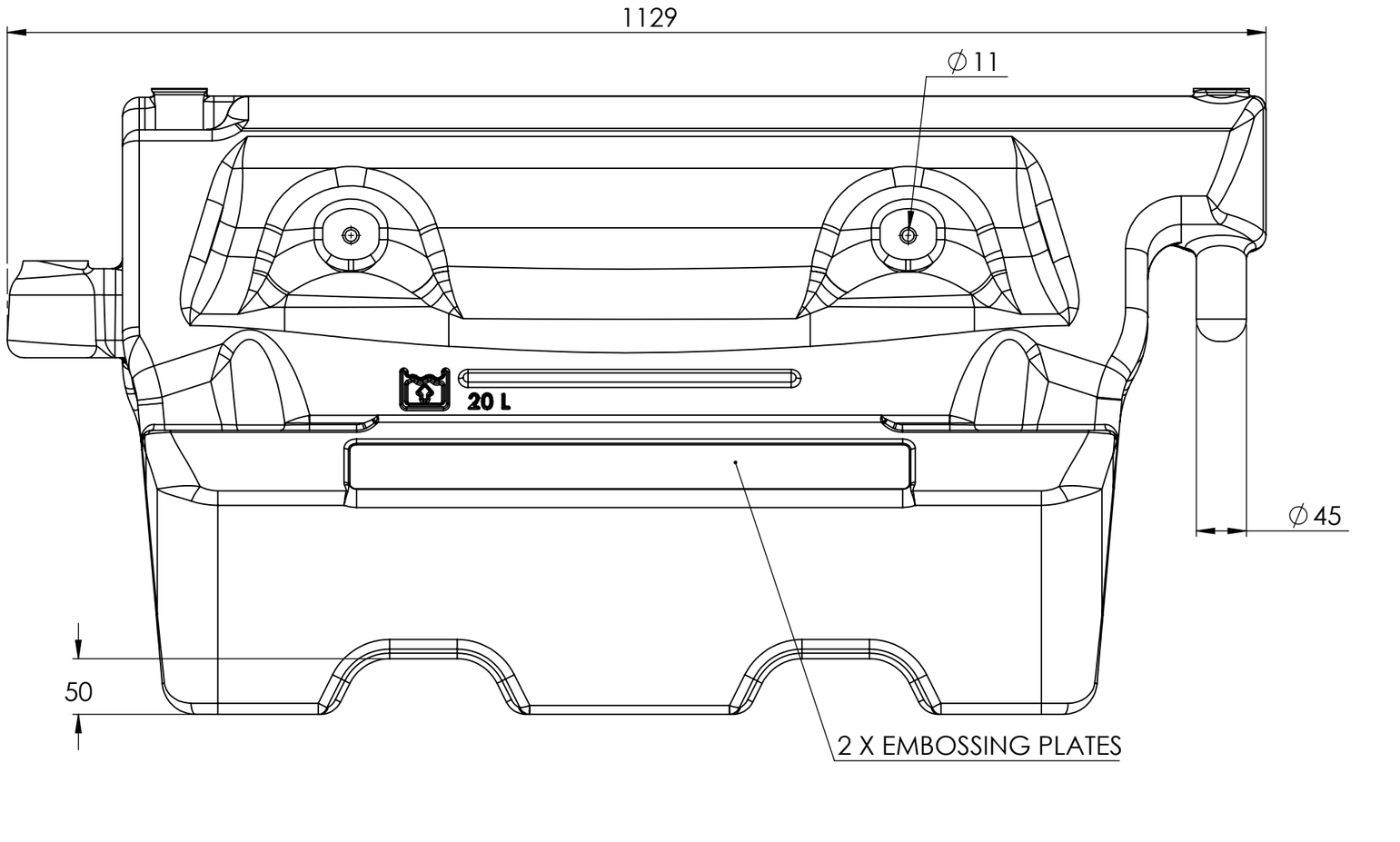

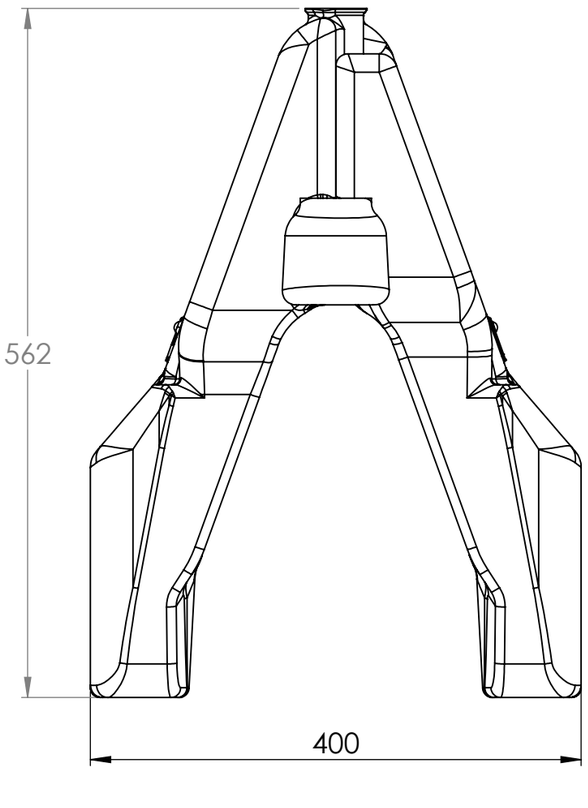

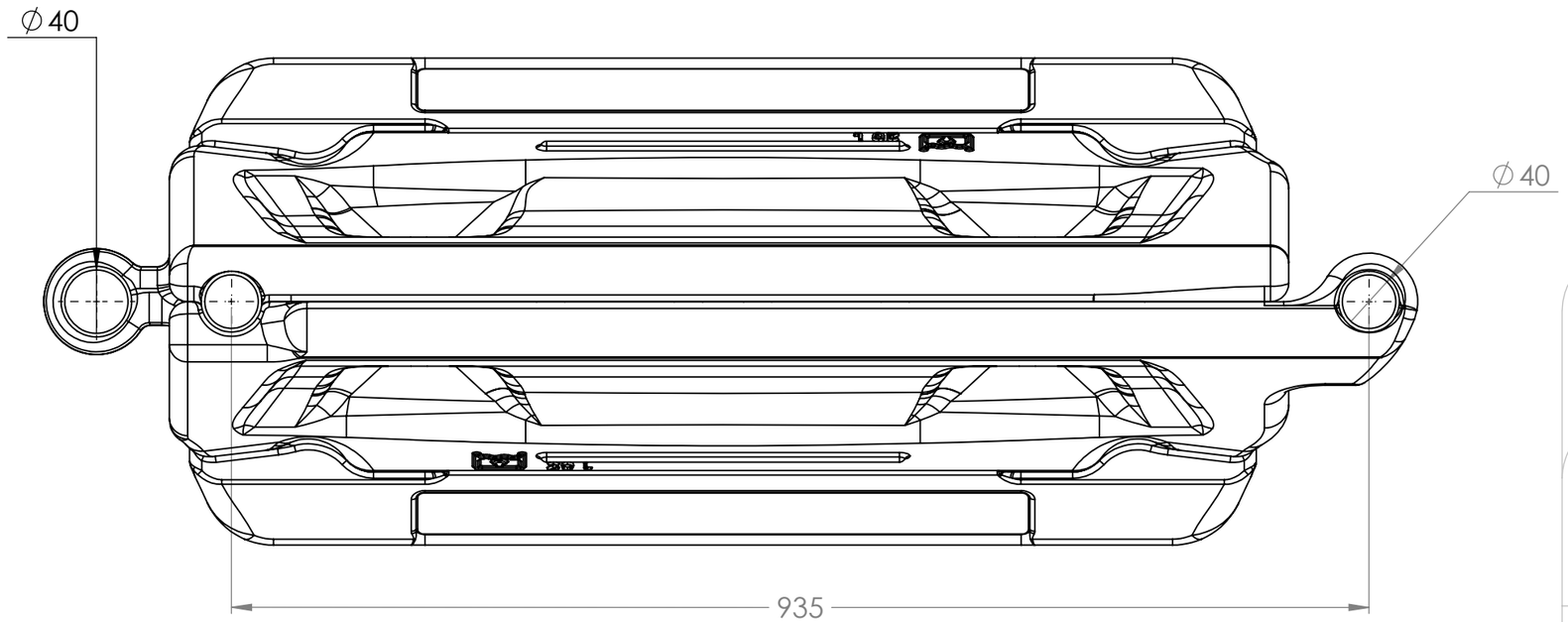

APPROVAL:

SIGNED:

DATE:

ANGLE OF PROJECTION: Third Angle

THIS IS A COMPUTER GENERATED DRAWING - REJECT IF MODIFIED BY HAND

FirstFence
HIRE & SALES
sales@firstfence.co.uk
01283 512111
www.firstfence.co.uk

TITLE:

Hog 600

	NAME	DATE
DRAWN	D. Wolstenholme	19 December 2018

WEIGHT: 5.5 kg

DEBUR AND BREAK ALL SHARP EDGES UNLESS OTHERWISE STATED

PROJECT/DWG NO: 349

REVISION: 22

SHEET: A3

THIS DRAWING IS THE PROPERTY & COPYRIGHT OF MELBA SWINTEX AND MUST NOT BE COPIED OR COMMUNICATED WITHOUT WRITTEN PERMISSION.

UNIT OF MEASUREMENT: mm

SCALE:1:5

SHEET 1 OF 1