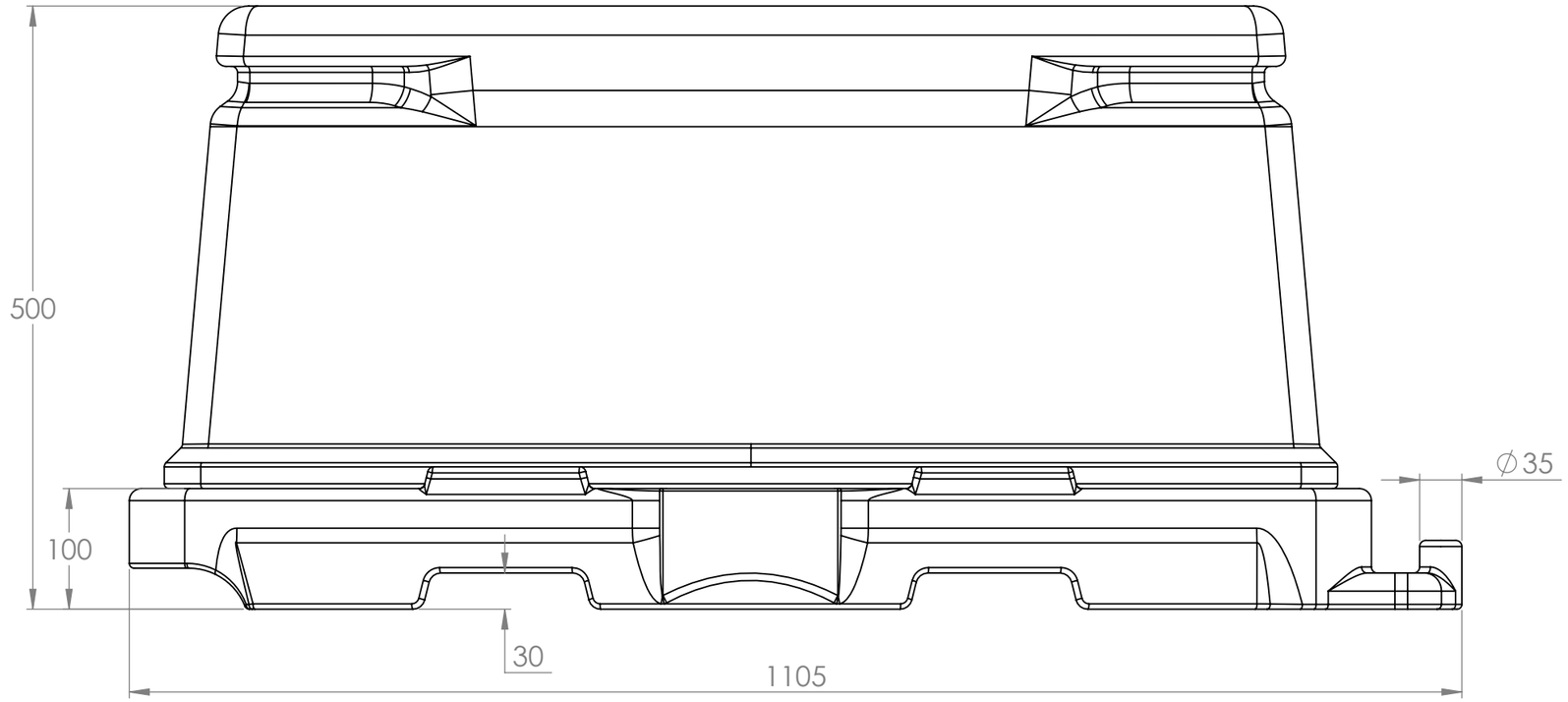

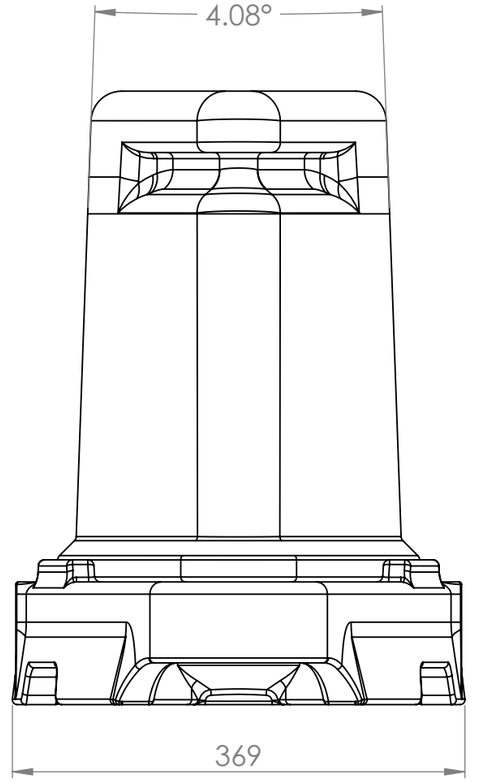

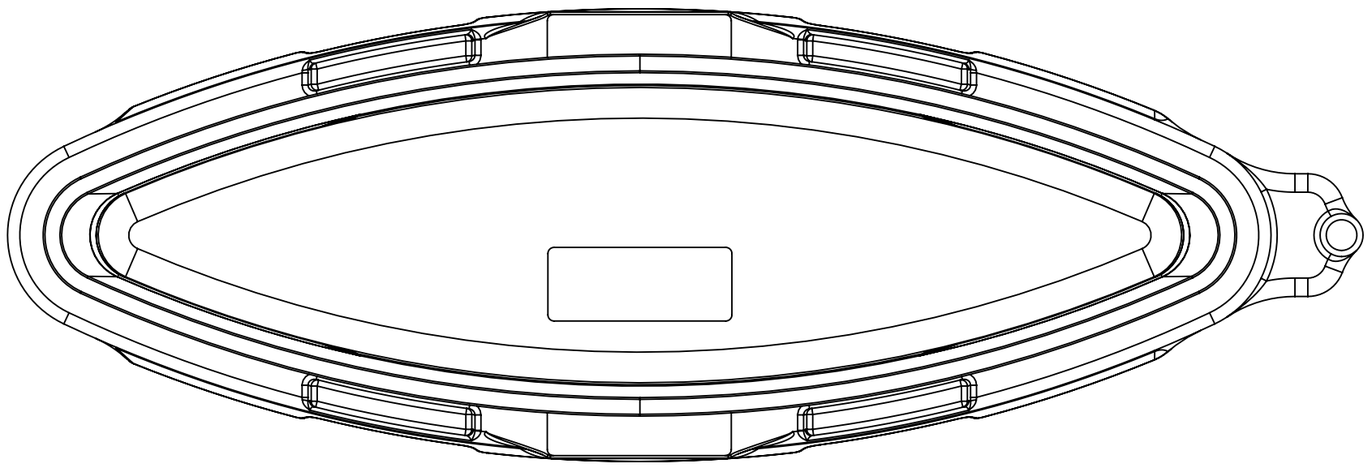

ANGLE OF PROJECTION: Third Angle

THIS IS A COMPUTER GENERATED DRAWING - REJECT IF MODIFIED BY HAND

FirstFence
HIRE & SALES
sales@firstfence.co.uk
01283 512111
www.firstfence.co.uk

TITLE:

Road Runner 500

	NAME	DATE
DRAWN	D. Wolstenholme	08 January 2025

THIS DRAWING IS THE PROPERTY & COPYRIGHT OF MELBA SWINTEX AND MUST NOT BE COPIED OR COMMUNICATED WITHOUT WRITTEN PERMISSION.

WEIGHT:

DEBUR AND BREAK ALL SHARP EDGES UNLESS OTHERWISE STATED

PROJECT/DWG NO:

REVISION	SHEET
0	A3

UNIT OF MEASUREMENT: mm SCALE:1:1 SHEET 1 OF 1