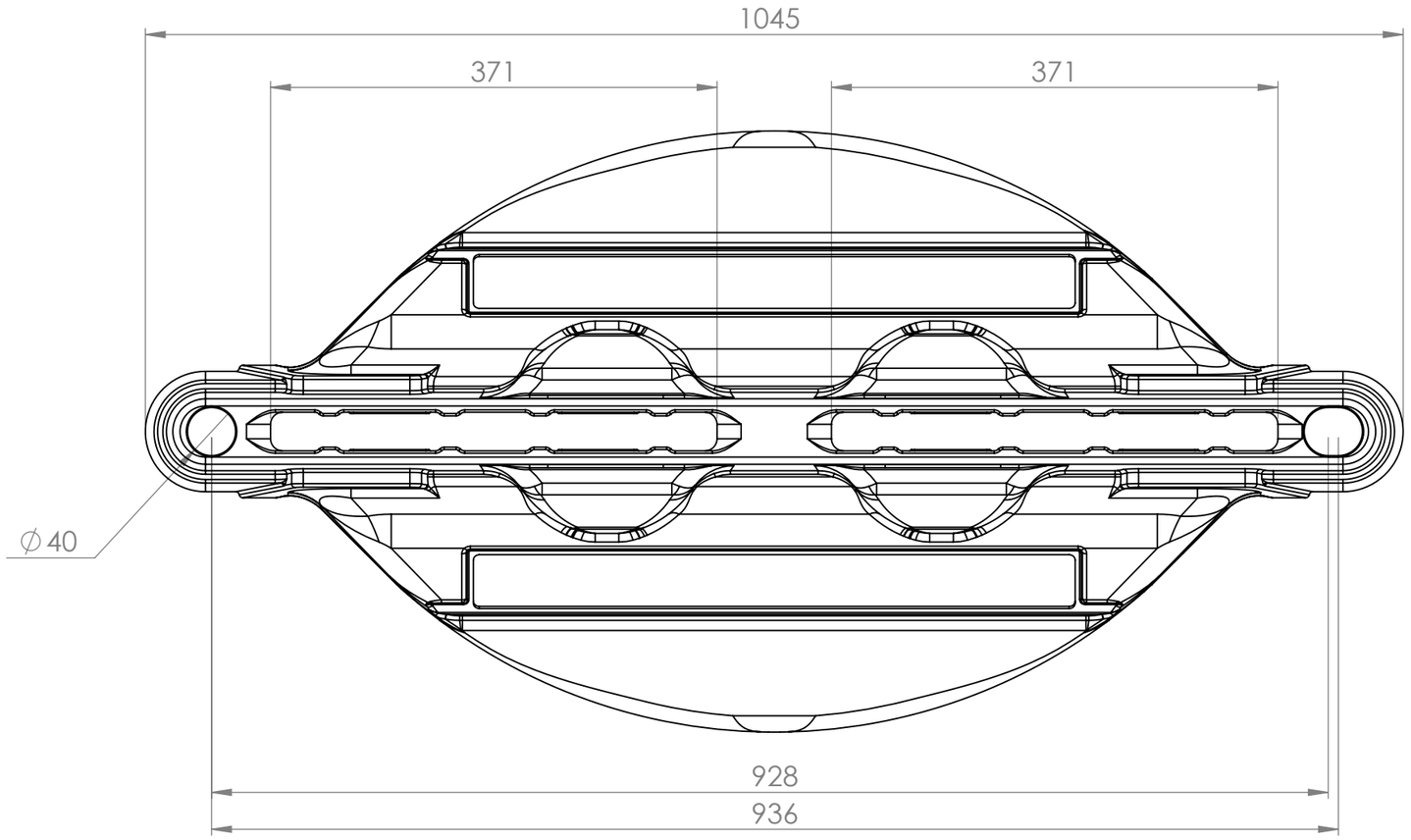

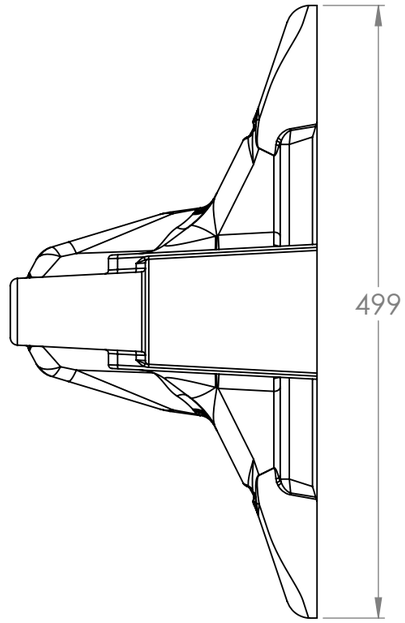

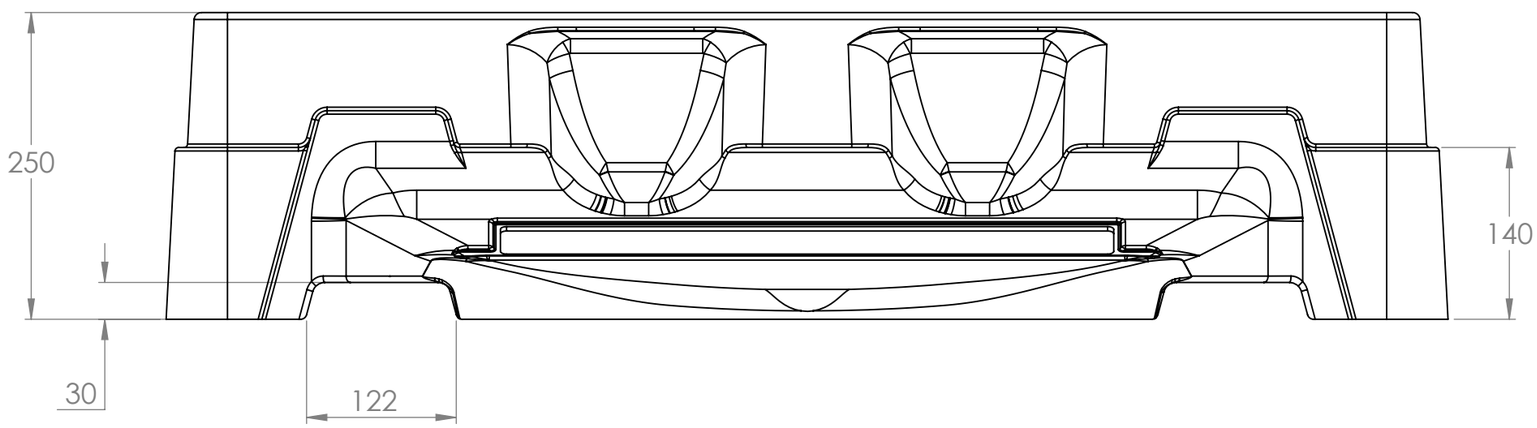

ANGLE OF PROJECTION: Third Angle

THIS IS A COMPUTER GENERATED DRAWING - REJECT IF MODIFIED BY HAND

FirstFence
HIRE & SALES
sales@firstfence.co.uk
01283 512111
www.firstfence.co.uk

TITLE: WW Base

	NAME	DATE
DRAWN	D. Wolstenholme	17 May 2021

THIS DRAWING IS THE PROPERTY & COPYRIGHT OF MELBA SWINTEX AND MUST NOT BE COPIED OR COMMUNICATED WITHOUT WRITTEN PERMISSION.

WEIGHT: 18 kg

DEBUR AND BREAK ALL SHARP EDGES UNLESS OTHERWISE STATED

PROJECT/DWG NO: 253

REVISION: 26

SHEET: A3

UNIT OF MEASUREMENT: mm

SCALE:1:5

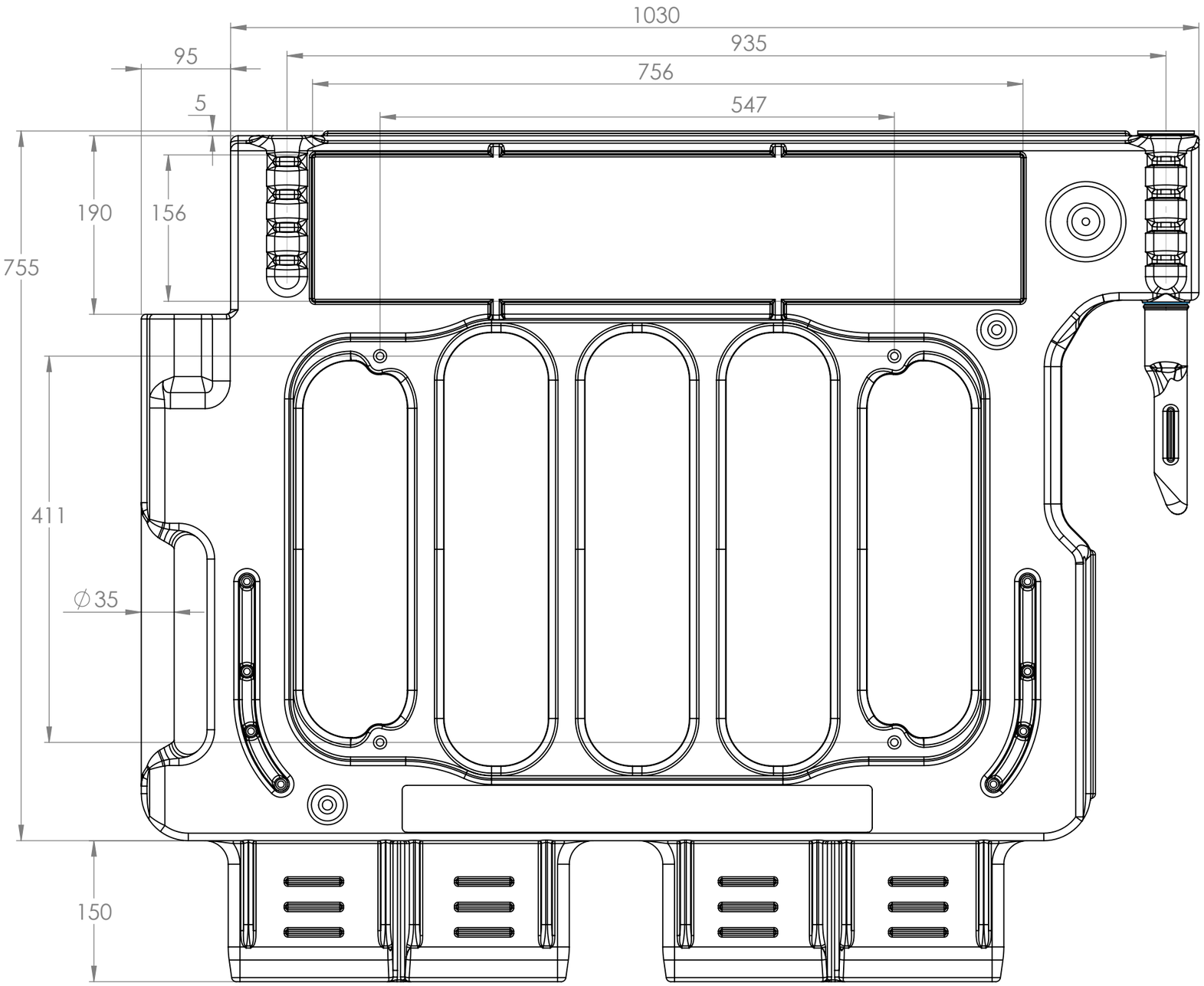

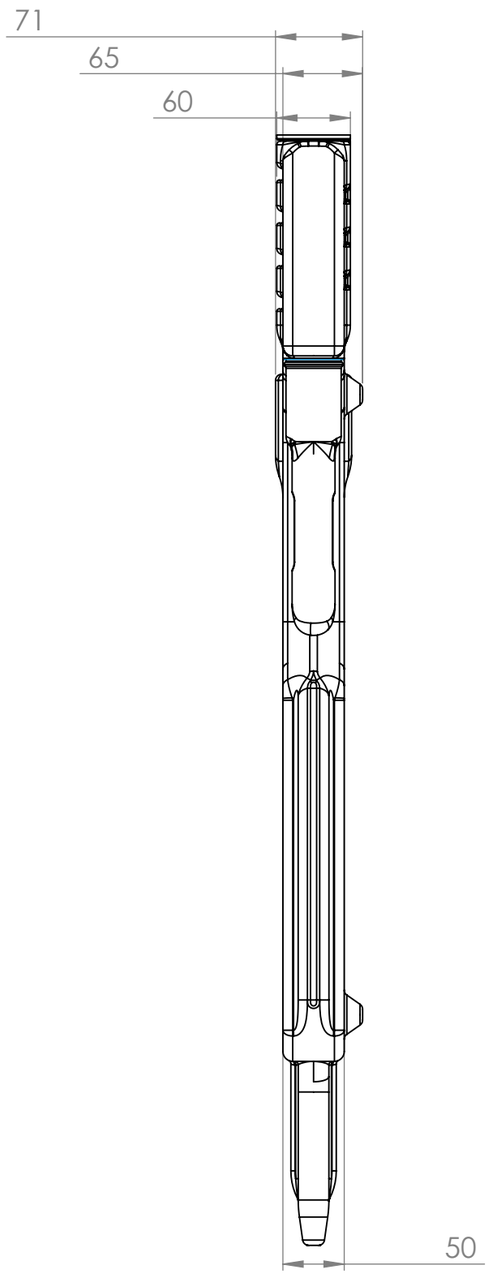

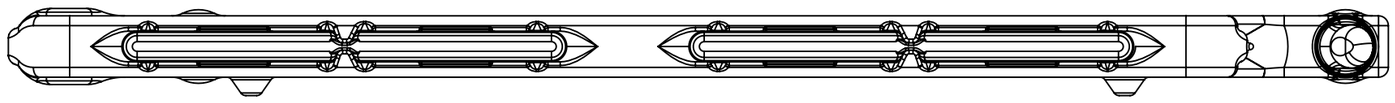

ANGLE OF PROJECTION: Third Angle

THIS IS A COMPUTER GENERATED DRAWING - REJECT IF MODIFIED BY HAND

FirstFence
HIRE & SALES
sales@firstfence.co.uk
01283 512111
www.firstfence.co.uk

TITLE:

WW Top Deck

	NAME	DATE
DRAWN	D. Wolstenholme	17 May 2021

THIS DRAWING IS THE PROPERTY & COPYRIGHT OF MELBA SWINTEX AND MUST NOT BE COPIED OR COMMUNICATED WITHOUT WRITTEN PERMISSION.

WEIGHT

DEBUR AND BREAK ALL SHARP EDGES UNLESS OTHERWISE STATED

PROJECT/DWG NO:

REVISION	SHEET
0	A3

UNIT OF MEASUREMENT: mm SCALE:1:5 SHEET 2 OF 2