FirstFence®
HIRE & SALES

Defender50 Barriers

Specification Sheet

SPC-DEFENDER50-001A



Call our Expert Sales Team for more information.

First Fence Ltd | Kiln Way, Woodville, South Derbyshire, DE11 8EA
01283 512 111 | www.firstfence.co.uk | sales@firstfence.co.uk

FirstFence® HIRE & SALES

Defender50 Barriers

Specification Sheet

SPC-DEFENDER50-001A

High-Speed Impact Protection & Perimeter Security

Engineered for stability and performance, the Defender50 delivers crash-tested protection for high-risk traffic management and demanding site enclosures. Providing a secure working environment, this system is crash tested to 50 mph—standing alone as the only system in its class tested with top fence panels—and utilises up to 400 litres of ballast volume in its UV-stabilised polymer shell to easily withstand severe impacts and prolonged outdoor use.

Designed for rapid deployment and efficient logistics, the Defender50 has metal plates and steel tube connectors for secure assembly, allowing for the installation of metal compound gates without needing to disassemble the wider system. With integrated fork-lift entry on the base, top-fill and sump-plug emptying, and an adaptable design providing 138° angular movement and compatibility with the DoubleTop range, it ensures streamlined handling and ultimate flexibility to meet your site's dynamic temporary safety requirements.

Key Features

- 50 mph Crash Tested
  (The only system in its class successfully crash-tested to 50 mph)
- High-Capacity Stability
  (Accommodates up to 400 litres of ballast for wind & impact resistance)
- Heavy-Duty Connections
  (Barriers are securely interlocked using metal plates and steel tube)
- Perfect Gate Integration
  (Compound gates can be installed without dismantling the whole system)
- Versatile Deployment
  (Features 138° of angular movement and forklift entry slots)



Suitable For

- High-Speed Highway Roadworks
- Deep Excavations & Construction Sites
- High-Security Events & Crowd Control
- Industrial Logistics Compounds
- Complex Temporary Traffic Routing

Specification

HEIGHT	WIDTH	DEPTH	WEIGHT/CAPACITY	MATERIAL	COLOUR
800mm	2340mm	350mm	40kg (Weight) 400 litres (Capacity)	UV Stable Polymer	Red or White

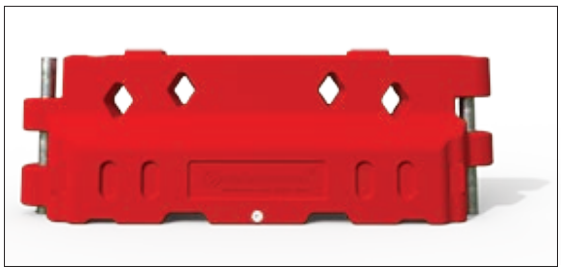

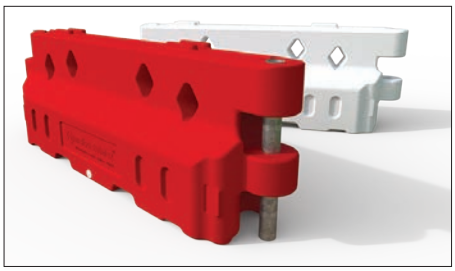



Call our Expert Sales Team for more information.

First Fence Ltd | Kiln Way, Woodville, South Derbyshire, DE11 8EA
01283 512 111 | www.firstfence.co.uk | sales@firstfence.co.uk

FirstFence®
HIRE & SALES

Defender50 Barriers

Specification Sheet

SPC-DEFENDER50-001A

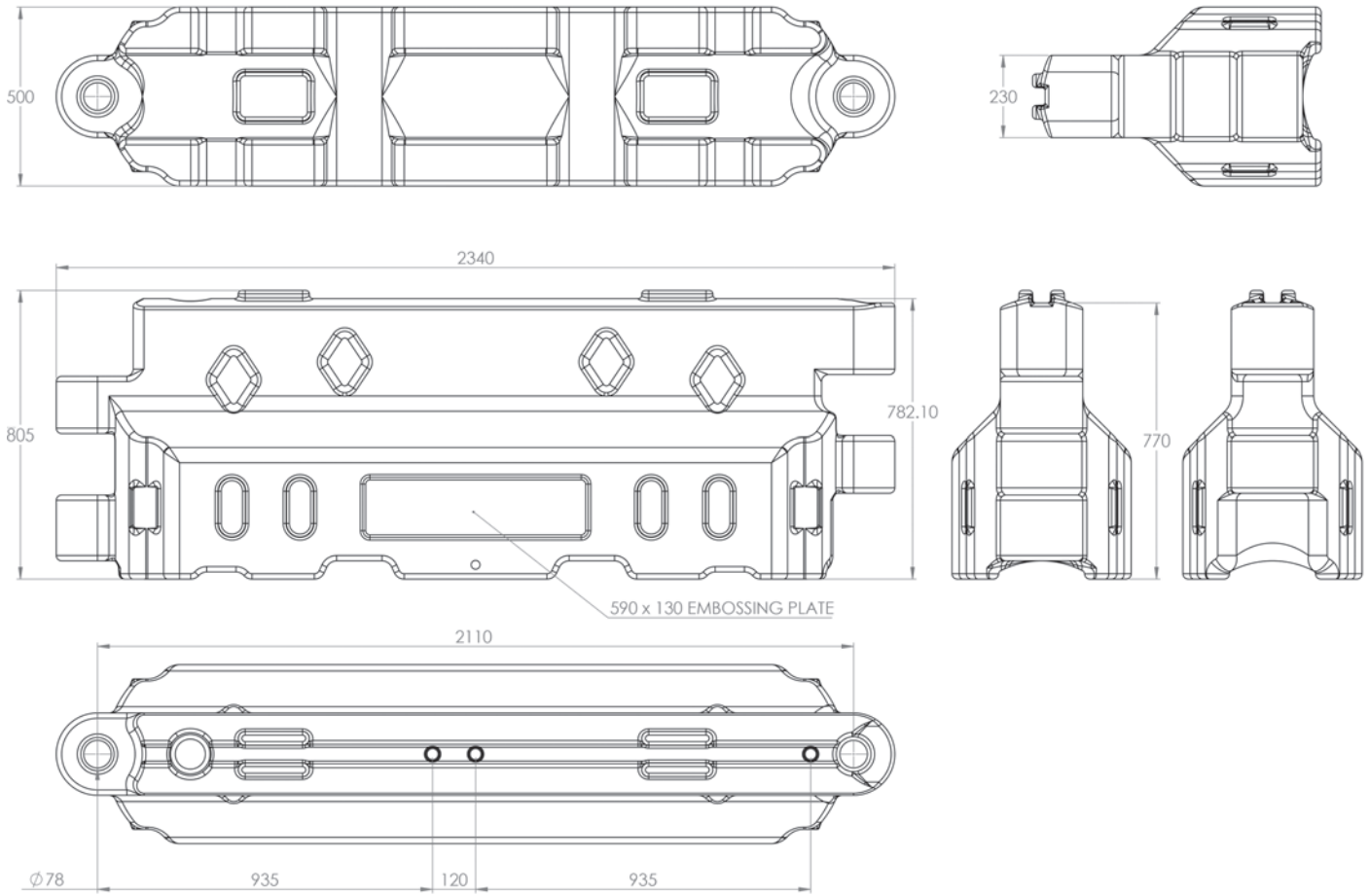

Wind Speed Testing

Temporary traffic barriers require ballast to comply with the three wind speed classifications outlined in BS 8442:2015:

Class A: 26.3 m/s (58 mph)

Class B: 17.6 m/s (39 mph)

Class C: 8.7 m/s (19 mph)

The Defender50 system (when full with 400 litres of water) was processed to determine the estimated ballast weight required for each wind class.

DEFENDER50

Barrier will overturn at approximately 55.2 m/s
Recommended Ballast Weight:
Class C: 0 kg | Class B: 0 kg | Class A: 0 kg



DEFENDER50 & Mini DoubleTop

Barrier will overturn at approximately 42.6 m/s
Recommended Ballast Weight:
Class C: 0 kg | Class B: 0 kg | Class A: 0 kg

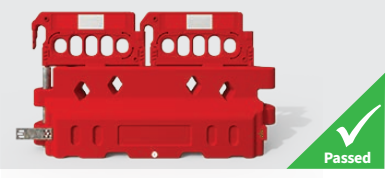

DEFENDER50 DoubleTop

Barrier will overturn at approximately 35.4 m/s
Recommended Ballast Weight:
Class C: 0 kg | Class B: 0 kg | Class A: 0 kg

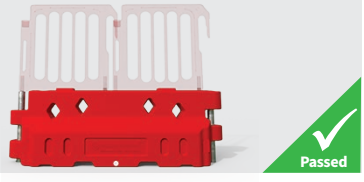

Call our Expert Sales Team for more information.

First Fence Ltd | Kiln Way, Woodville, South Derbyshire, DE11 8EA
01283 512 111 | www.firstfence.co.uk | sales@firstfence.co.uk

FirstFence®
HIRE & SALES

Defender50 Barriers

Specification Sheet

SPC-DEFENDER50-001A

Crash Testing

The Defender50 barrier system with integrated fencing was subjected to controlled crash criteria set out in BS EN 1317 containment level N1.

DEFENDER50 SPECIFICATION:

Height:	800 mm
Width:	2295 mm
Depth:	350 mm
Overall Weight:	440 kg

VEHICLE SPECIFICATION:

Model:	VW Passat (2002)
Weight:	1500 kg

TEST SUMMARY:

- ✓ Impact angles within tolerance - 20° impact.
- ✓ Vehicle did not breach system.
- ✓ Vehicle stayed on correct side & within CEN box.
- ✓ Vehicle did not roll.
- ✓ System did not penetrate Vehicle.
- ✓ Impact severity level rating - **A**.
- ✓ Impact speed - 81.3 kmh / 50.51 mph.









Call our Expert Sales Team for more information.

First Fence Ltd | Kiln Way, Woodville, South Derbyshire, DE11 8EA
01283 512 111 | www.firstfence.co.uk | sales@firstfence.co.uk