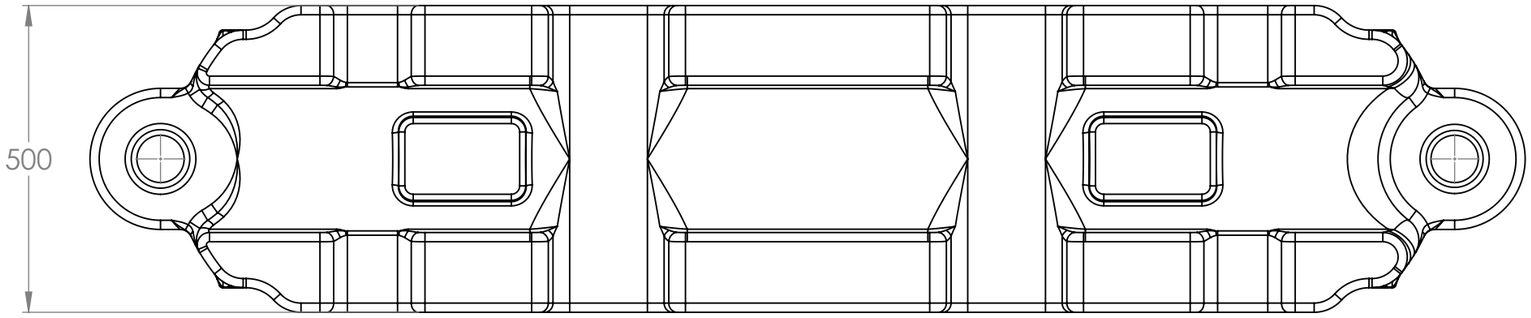


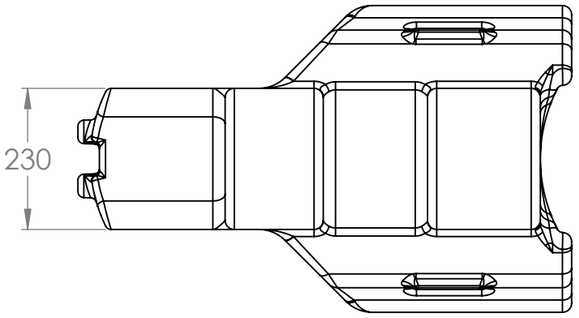


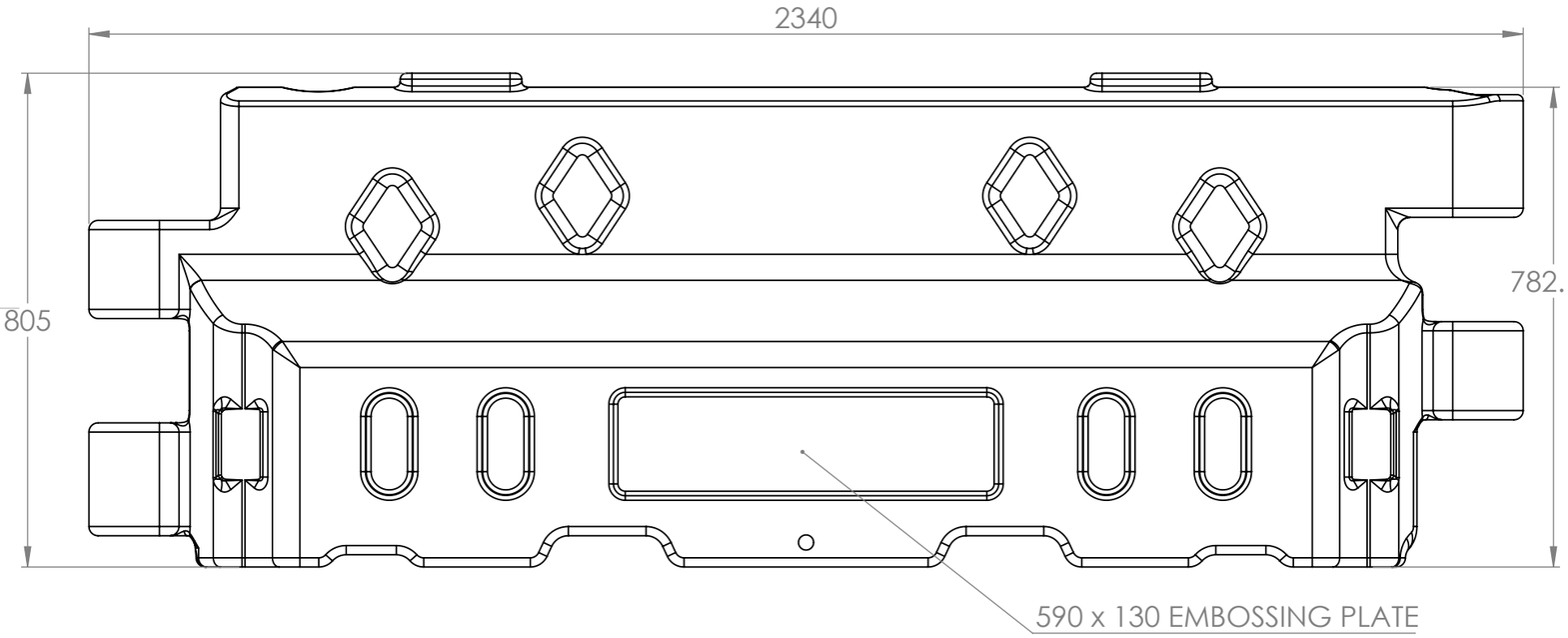


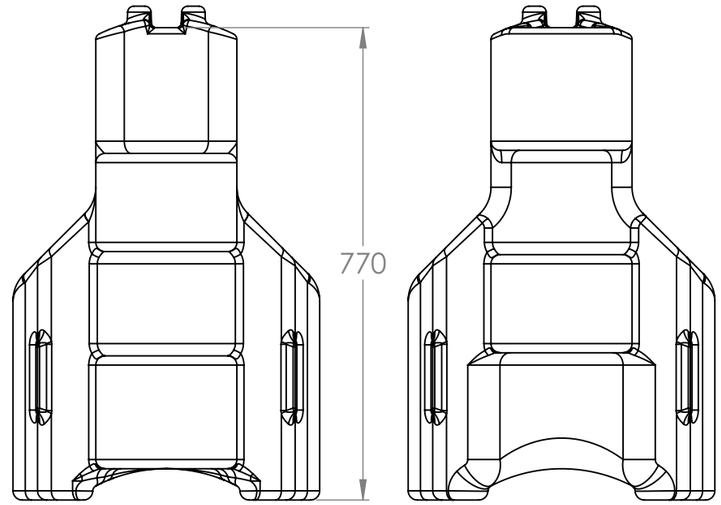


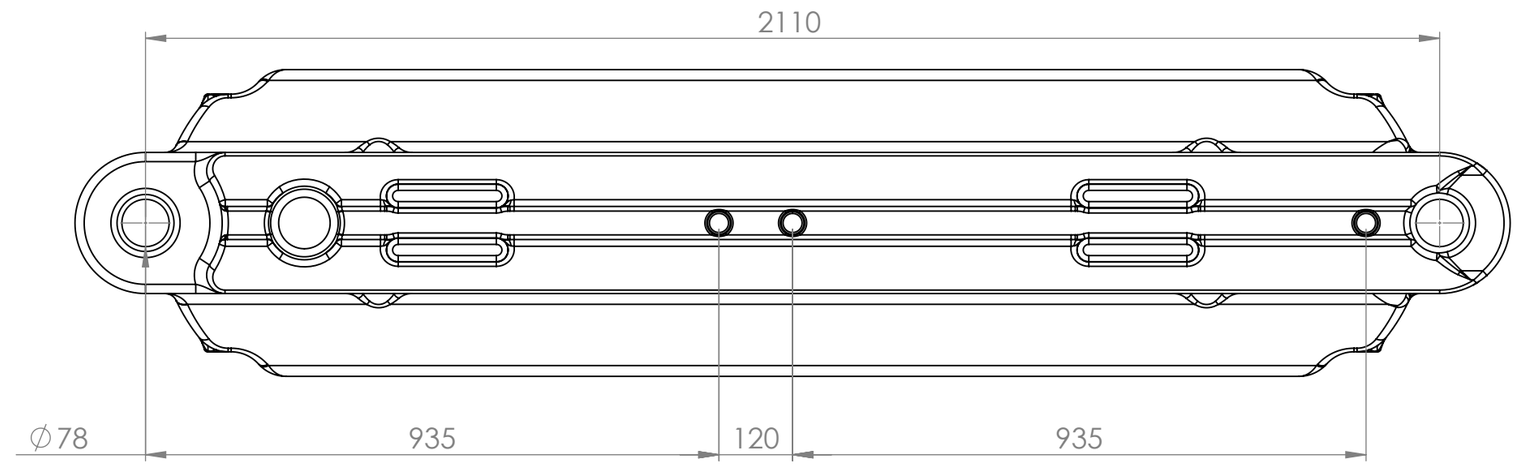


EST. MAX CAPACITY: 460 LITRES

ANGLE OF PROJECTION: Third Angle

THIS IS A COMPUTER GENERATED DRAWING - REJECT IF MODIFIED BY HAND

First Fence
HIRE & SALES
sales@firstfence.co.uk
01283 512111
www.firstfence.co.uk

TITLE: DEFENDER50

| | NAME | DATE |
|---|---|---|
| DRAWN | D. Wolstenholme | 05 December 2024 |

WEIGHT: 40 kg

DEBUR AND BREAK ALL SHARP EDGES UNLESS OTHERWISE STATED

PROJECT/DWG NO: 463

REVISION: 09

SHEET: A3

THIS DRAWING IS THE PROPERTY & COPYRIGHT OF MELBA SWINTEX AND MUST NOT BE COPIED OR COMMUNICATED WITHOUT WRITTEN PERMISSION.

UNIT OF MEASUREMENT: mm SCALE:1:1 SHEET 1 OF 1