FirstFence®
HIRE & SALES

Road Runner

Specification Sheet

SPC-ROADRUNNER-001A



Call our Expert Sales Team for more information.

First Fence Ltd | Kiln Way, Woodville, South Derbyshire, DE11 8EA
01283 512 111 | www.firstfence.co.uk | sales@firstfence.co.uk

FirstFence®
HIRE & SALES

Road Runner

Specification Sheet

SPC-ROADRUNNER-001A

Self-Weighted Containment & High-Impact Barricading

Engineered for uncompromising stability and structural longevity, the Road Runner Barrier delivers effective site containment without the need for water, sand, or external ballasting. Providing a secure and reliable barricade, this system relies entirely on its own weight and structural design, pairing a virgin HDPE top with a heavy-duty recycled PVC base to easily withstand high impacts, provide superb wind resistance, and endure prolonged outdoor use.

Designed for rapid deployment and efficient logistics, the Road Runner features a unique pin-on-tail system that seamlessly interlocks with the underside of adjoining separators to quickly create secure lanes. With integrated fork-lift slots on the base and ergonomic top handles for easy manual mobility, it ensures streamlined handling across any environment. Available in two versatile heights and highly visible red or white variations.

Key Features

- Interlocking Design
  (A unique pin-on-tail system that connects with adjoining separators)
- Self-Weighted Stability
  (Relies on its own structural weight to provide impact resistance)
- Easy Mobility
  (Includes integrated fork lift slots and ergonomic top handles)
- Durable Construction
  (Heavy-duty recycled PVC base and virgin HDPE top)
- Customisable Branding
  (Available in red and white, 2 heights, with ability to emboss corporate branding)



Suitable For

- Construction & Demolition Sites
- Traffic Management & Roadworks
- Event Crowd Control
- Airports & Logistics Hubs
- Car Parks & Retail Facilities

Specification

HEIGHT	WIDTH	DEPTH	WEIGHT	MATERIAL	COLOUR
500mm	1105mm	370mm	12.80kg	Virgin HDPE (Top) Recycled PVC (Base)	Red or White
800mm	1105mm	370mm	13.50kg	Virgin HDPE (Top) Recycled PVC (Base)	Red or White

Call our Expert Sales Team for more information.

First Fence Ltd | Kiln Way, Woodville, South Derbyshire, DE11 8EA
01283 512 111 | www.firstfence.co.uk | sales@firstfence.co.uk

FirstFence®
HIRE & SALES

Road Runner

Specification Sheet

SPC-ROADRUNNER-001A

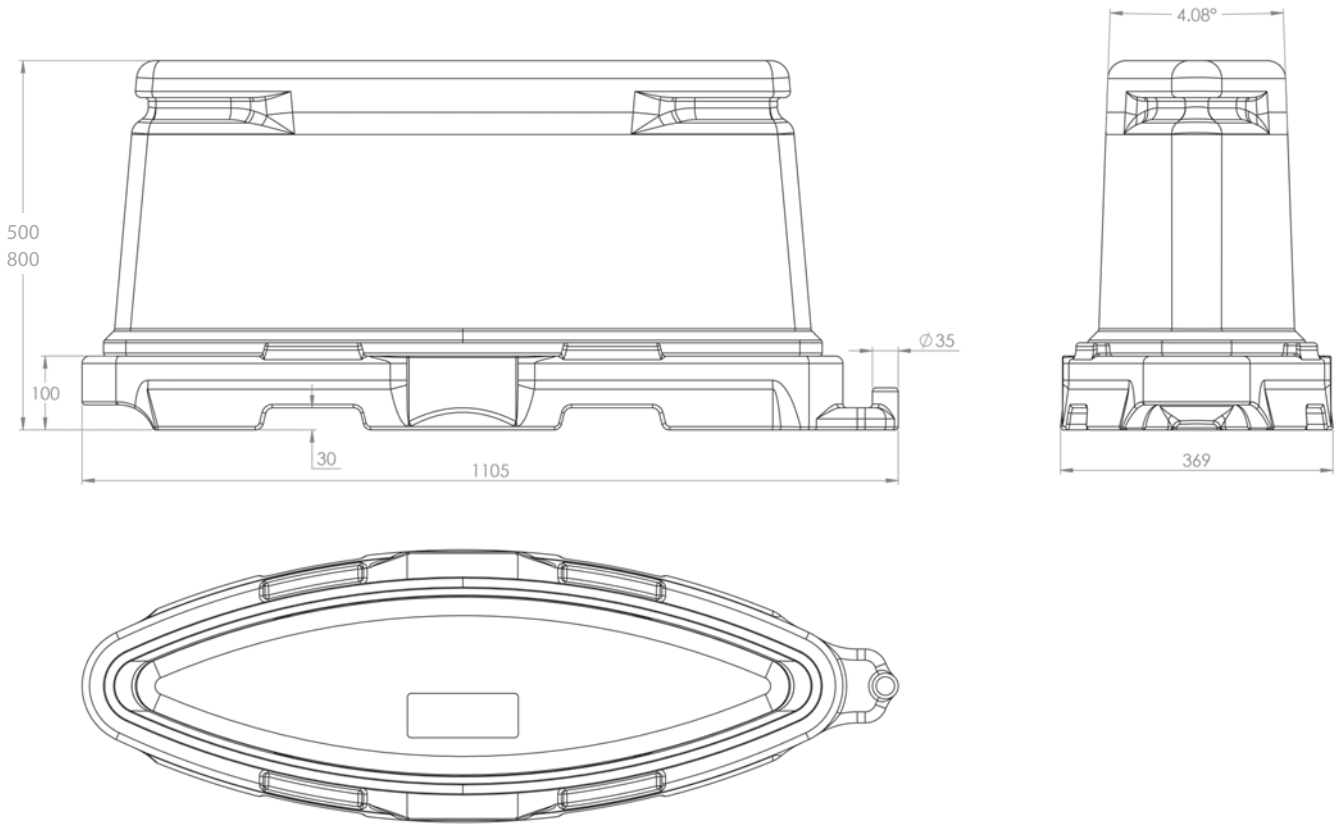

Wind Speed Testing

Temporary traffic barriers require ballast to comply with the three wind speed classifications outlined in BS 8442:2015:

Class A: 26.3 m/s (58 mph)

Class B: 17.6 m/s (39 mph)

Class C: 8.7 m/s (19 mph)

To determine its maximum wind resistance, the Road Runner Barrier underwent rigorous testing at the MIRA Full-Scale Wind Tunnel. The resulting wind speed tolerances and recommended ballast weights for each Wind Class are detailed below:

CLASS C

Road Runner 500 Withstood up to 34 mph
Recommended Ballast Weight: 0 kg

Road Runner 800 Withstood up to 21.5 mph
Recommended Ballast Weight: 0 kg



CLASS B

Road Runner 500 Withstood up to 42 mph
Recommended Ballast Weight: 15 kg

Road Runner 800 Withstood up to 39.3 mph
Recommended Ballast Weight: 30 kg



CLASS A

Road Runner 500 Withstood up to 65 mph
Recommended Ballast Weight: 60 kg

Road Runner 800 Withstood up to 58.8 mph
Recommended Ballast Weight: 85 kg



Call our Expert Sales Team for more information.

First Fence Ltd | Kiln Way, Woodville, South Derbyshire, DE11 8EA
01283 512 111 | www.firstfence.co.uk | sales@firstfence.co.uk