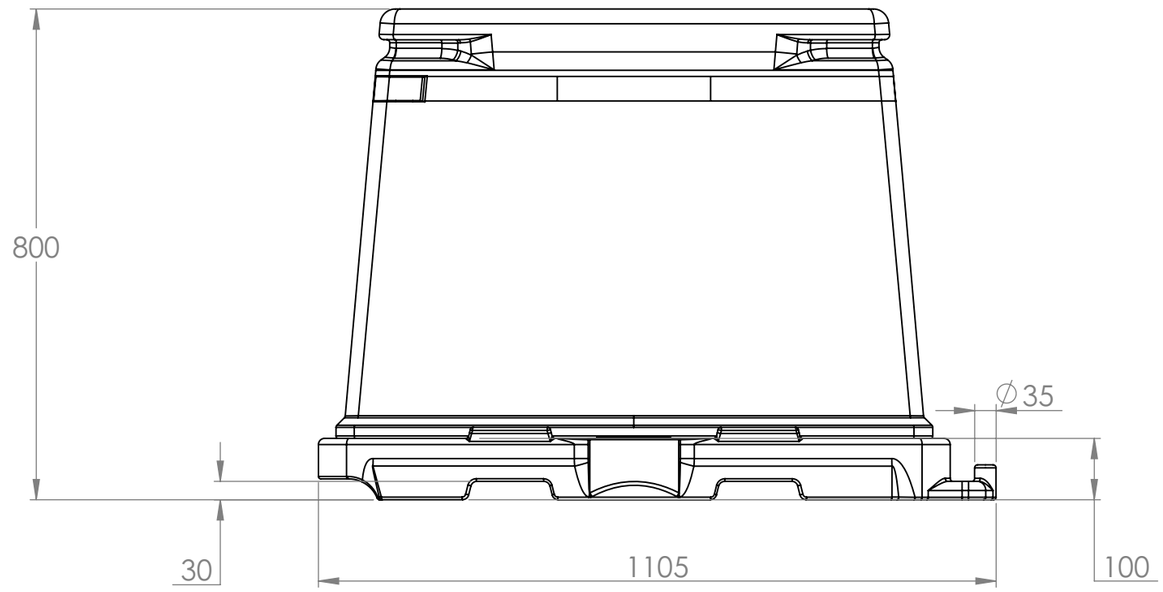

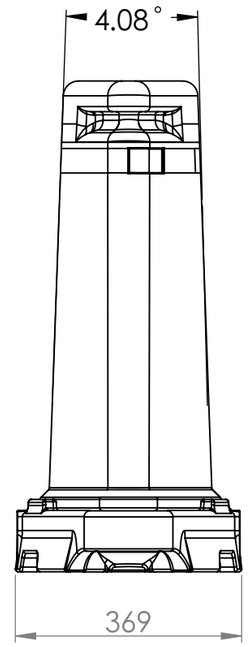

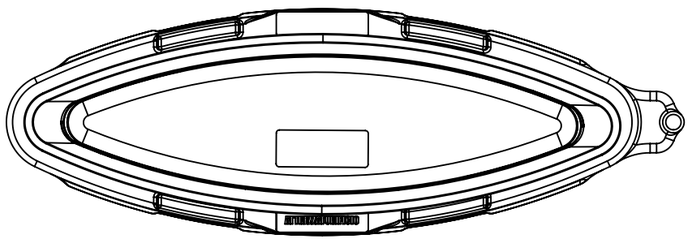

ANGLE OF PROJECTION:Third Angle

THIS IS A COMPUTER GENERATED DRAWING - REJECT IF MODIFIED BY HAND

FirstFence® HIRE & SALES

TITLE:

Road Runner 800

	NAME	DATE
DRAWN	D. Wolstenholme	09 November 2026

WEIGHT:

DEBUR AND BREAK ALLSHARP EDGES UNLESS OTHERWISE STATED

PROJECT/DWG NO:

REVISION	SHEET
0	A3

SHEET 1 OF 1

THIS DRAWING IS THE PROPERTY & COPYRIGHT OF MELBA SWINTEX AND MUST NOT BE COPIED OR COMMUNICATED WITHOUT WRITTEN PERMISSION.

UNIT OF MEASUREMENT: mm SCALE:1:10