Wooden gates

4DW

https://www.locinox.com/en-gb/gate-hardware/hinges/wooden-gates/d00000082

Aesthetic, vandal proof hinge for wooden gates. The stainless steel hinge can be adjusted in 4 dimensions. Height, depth, left / right alignment and rotational direction can be adjusted. Adjustments can be made after installing the hinges. This way your gate is always perfectly aligned.

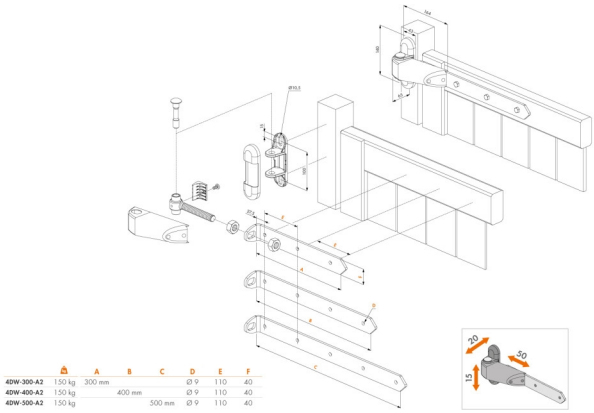

		A	B	C	D	E	F
4DW-300-A2	150 kg	300 mm			Ø 9	110	40
4DW-400-A2	150 kg		400 mm		Ø 9	110	40
4DW-500-A2	150 kg			500 mm	Ø 9	110	40

TECHNICAL SPECIFICATIONS

Left-Right Adjustability	Yes
Minimal Distance Gate - Post	0 mm
Gate Weight	*
Horizontal Adjustability	50 mm
Vertical Adjustability	15 mm
Depth Adjustability	x
Materials Main Part(s)	Stainless Steel
Hours of Salt Spray Testing	500
Test Frequency	500000
Years of Warranty	3