DO NOT SCALE DRAWING

Notes:

1. Manufactured to BS 7818.
2. Hot dip galvanised to ISO 1461.

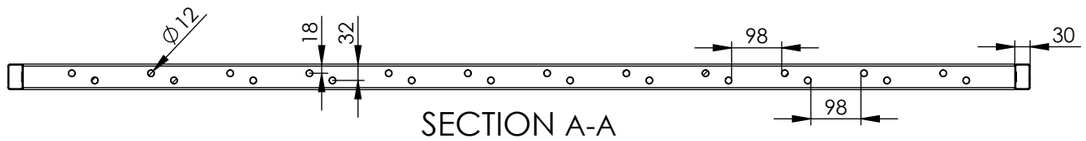

SECTION A-A

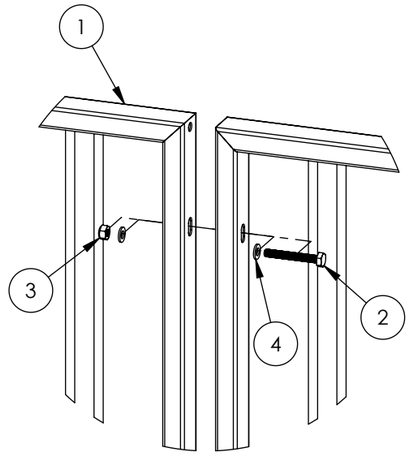

EXPLODED VIEW

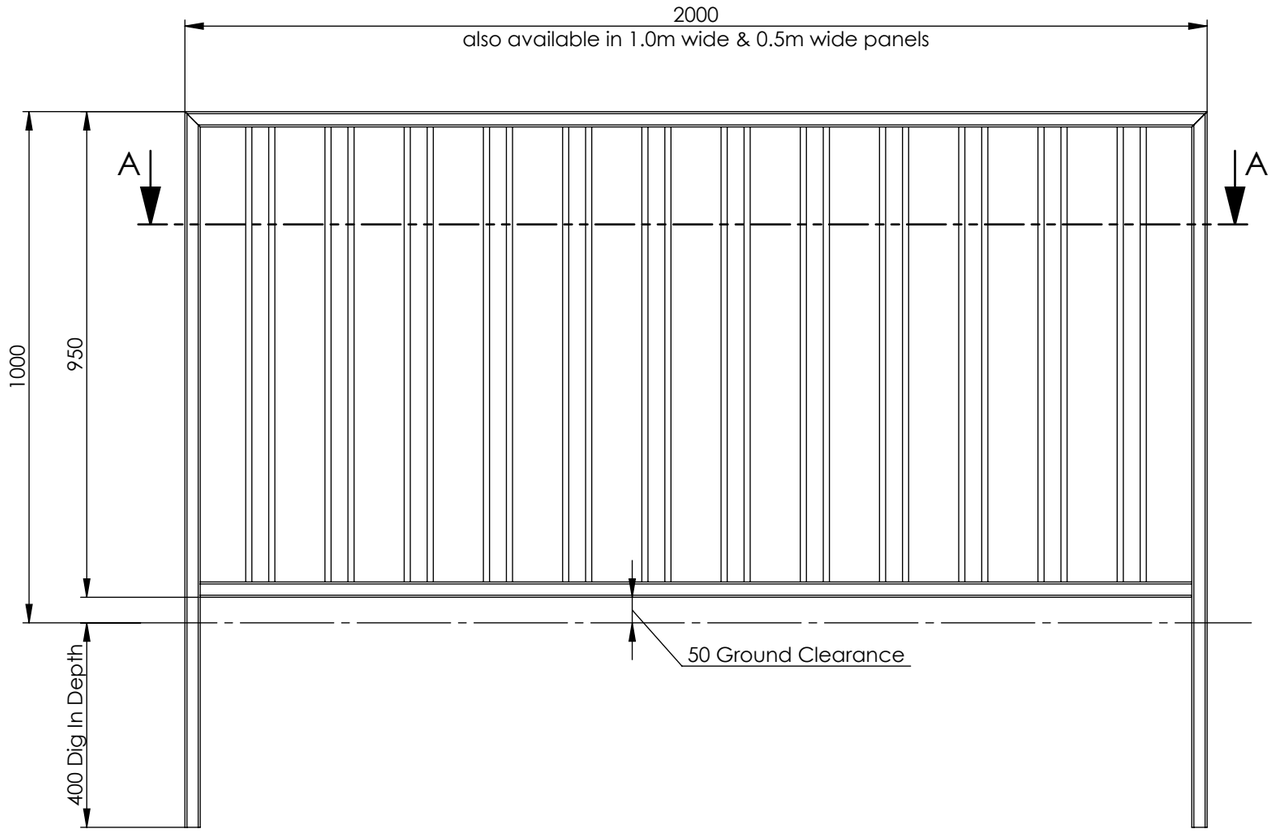

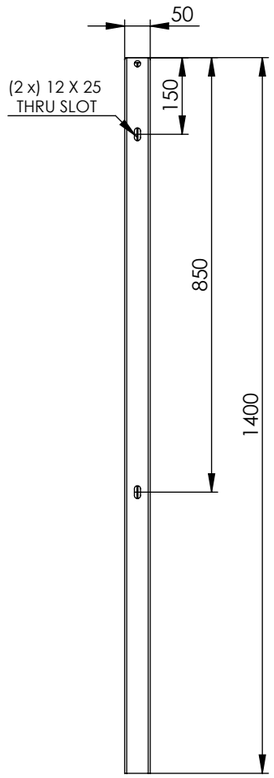

Item	Component Name	Qty
1	*GUAR-PG1-0070 - PG1 PEDESTRIAN GUARDRAIL DOUBLE STAGGER 2.0m WIDE - BS7818 *GUAR-PG1-0080 - PG1 PEDESTRIAN GUARDRAIL DOUBLE STAGGER 1.0m WIDE - BS7818 *GUAR-PG1-0090 - PG1 PEDESTRIAN GUARDRAIL DOUBLE STAGGER 0.5m WIDE - BS7818	1
2	GUAR-FIX-0010 - M10 x 75mm FULL THREAD HEXAGON BOLT - STAINLESS STEEL	2
3	GUAR-FIX-0030 - M10 HEXAGON NYLON LOCKING NUT - STANLESS STEEL	2
4	GUAR-FIX-0050 - M10 x 20mm FORM A FLAT WASHER - STAINLESS STEEL	4

REV	DESCRIPTION	DATE

	NAME	DATE
DRAWN	L.T	08/04/2025
APV'D		

Tolerance	
0 - 50mm	± 0.2mm
> 50 - 500mm	±1mm
>1000mm	± 3mm

FirstFence® HIRE & SALES

SKU: *GUAR-KIT-_____

Third Angle Projection

TITLE: PG1 PEDESTRIAN GUARDRAIL DOUBLE STAGGER 2.0m - 0.5m WIDE - BS7818 - KIT

REV A

A3

Material: GALVANISED STEEL

WEIGHT: N/A

SCALE: 1:20

SHEET 1 OF 1